MITSUBISHI

AUTO-TRACKING
COLOR DISPLAY MONITOR

MODEL

XC-3730C

USER'S GUIDE

For future reference, record the serial number of your display monitor in the space below:

SERIAL No. [ ]

The serial number is located on the rear cover of the set.

WARNING

RADIO INTERFERENCE REGULATIONS STATEMENT FOR U.S.A.

This equipment has been tested and found to comply with the limits for a Class A digital device, pursuant to Part 15 of the FCC Rules. These limits are designed to provide reasonable protection against harmful interference when the equipment is operated in a commercial environment. This equipment generates, uses, and can radiate radio frequency energy and, if not installed and used in accordance with the instruction manual, may cause harmful interference to radio communications. Operation of this equipment in a residential area is likely to cause harmful interference in which case the user will be required to correct the interference at his own expense.

THIS PRODUCT HAS BEEN TESTED AND FOUND TO COMPLY WITH THE LIMITS WITH A SHIELDED CABLE.
USE IT TO REDUCE THE POSSIBILITY OF CAUSING INTERFERENCE TO RADIO, TELEVISION, AND OTHER ELECTRIC DEVICES.

NO USER SERVICEABLE PARTS INSIDE. DO NOT ATTEMPT TO MODIFY THIS EQUIPMENT. IF MODIFIED, YOUR AUTHORITY TO OPERATE THIS EQUIPMENT MIGHT BE VOIDED BY FCC.

3.2 Rear

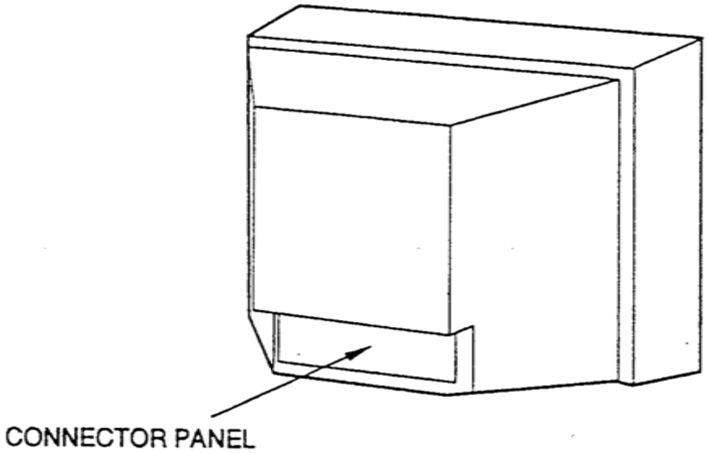

Connector panel

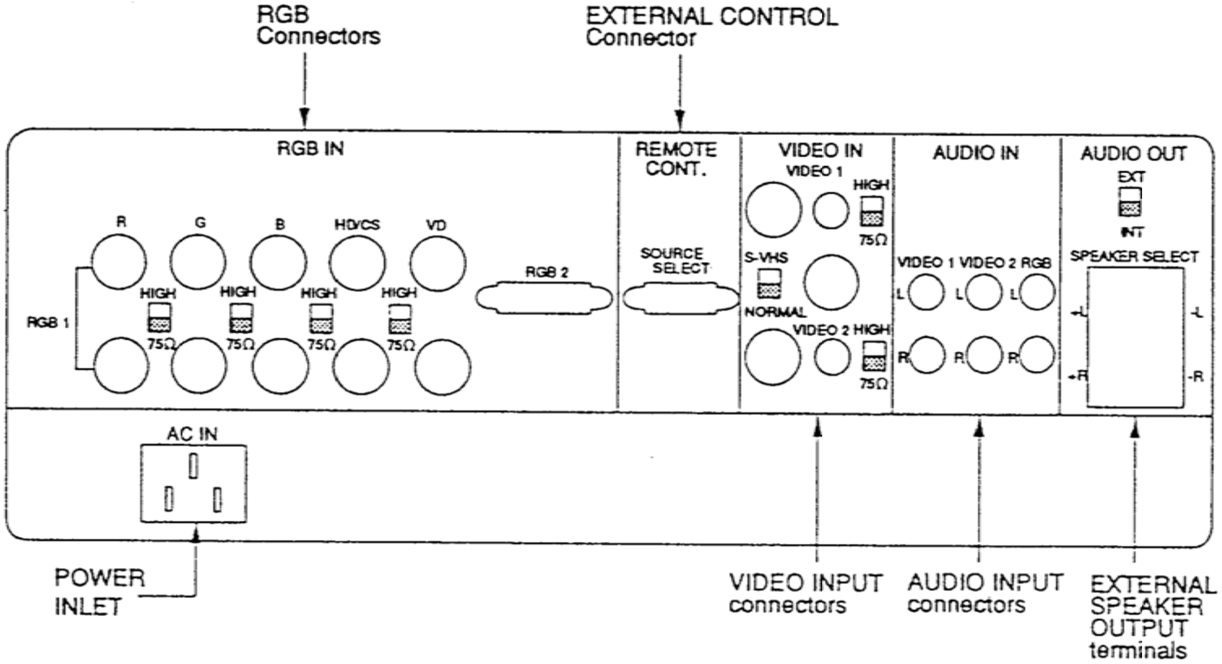

3.3 Wireless Remote Control

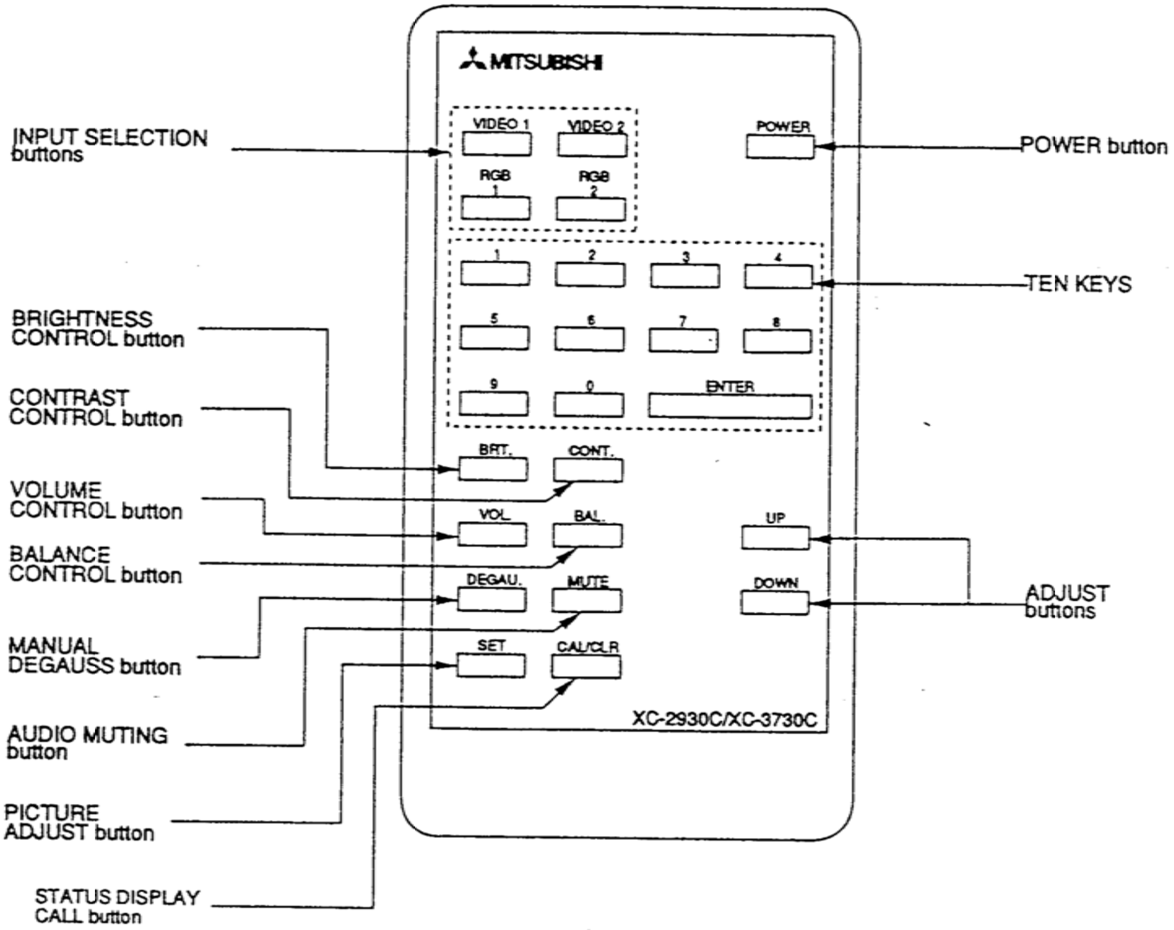

How to insert batteries

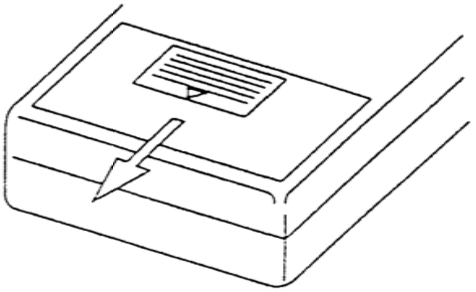

Open a cover plate

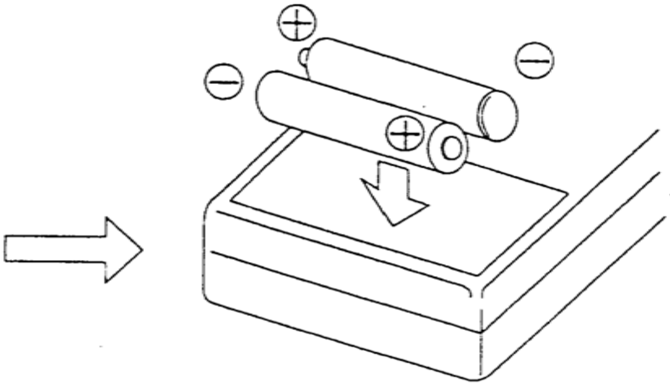

Insert batteries correctly.
The batteries must be type UM-4 (1.5V) or equivalent.

4.1.4 AUDIO CONTROL

[6] VOLUME CONTROL button (VOL.)

After pressing the VOL. button [6], the UP DOWN buttons [12] [13] are used for the level control.

During adjusting, the function name VOLUME and the level figures (1~62) are displayed on the screen.

[7] BALANCE CONTROL button (BAL.)

This function is for a balance control between left and right volume of the stereo amplifier.

After pressing the BAL. button [7], the UP DOWN buttons [12] [13] are used for the balance control. (UP-Right, DOWN-Left)

During adjusting, the functions name BALANCE and the level figures (L32~0~R31) are displayed on the screen.

4.1.5 PICTURE ADJUSTMENT

[8] PICTURE ADJUST button (SET)

The picture adjustment contains following functions.

(1) PICTURE PURITY adjustment (PURITY)
(2) MOIRE CLEAR adjustment (MOIRE) ——— associated with RGB 1,2 only
(3) VIDEO COLOR adjustment (COLOR) ——— associated with VIDEO 1,2 only
(4) VIDEO SHARPNESS adjustment (SHARPNESS)associated with VIDEO 1,2only
(5) VIDEO TINT adjustment (TINT) ———— associated with VIDEO 1,2 only
(6) PICTURE WIDTH adjustment (H-WIDTH)
(7) PICTURE HORIZONTAL POSITION adjustment (H-PHASE)
(8) PICTURE HEIGHT adjustment (V-HEIGHT)
(9) PICTURE VERTICAL POSITION adjustment (V-POSITION)
(10) PICTURE SIDE PINCUSHION DISTORTION adjustment (PCC-GAIN)
(11) PICTURE SIDE TRAPEZOID DISTORTION adjustment (PCC-PHASE)
(12) STATUS DISPLAY INHIBIT button (DISPLAY)
(13) ADDRESS NO. setting (ADDRESS)
(14) PICTURE WHITE COLOR setting (WHITE)
(15) PICTURE RED DRIVE OF WHITE COLOR adjustment (DRIVE. R) —— associated with USER MODE OF WHITE only.
(16) PICTURE GREEN DRIVE OF WHITE COLOR adjustment (DRIVE. G) — associated with USER MODE OF WHITE only.
(17) PICTURE BLUE DRIVE OF WHITE COLOR adjustment (DRIVE. B)—— associated with USER MODE OF WHITE only.

By operation of the front control switches, above functions are stepped to change by pressing the SET button [8], and the functions which are not associated with the input selected are skipped over.

When using the wireless remote control, the above functions are grouped into picture pages and displayed. Pages are turned by pressing the SET button [8], then press the number of the function desired and press ENTER button [14].

(1) PICTURE PURITY adjustment (PURITY)
Local magnetism may cause partial discoloration on the screen. This magnetism can be compensated by adjusting the cancel coil. The UP DOWN buttons [12] [13] are used for the adjusting. During adjusting, the function name PURITY and set figures (S32~0~N31) are displayed on the screen.

(2) MOIRE CLEAR adjustment (MOIRE)
Moire is a phenomenon that interference stripe appear on the screen. The moire level of the picture for RGB 1 and RGB 2 can be decreased by pressing UP DOWN buttons [12] [13]. The over-adjustment might degrade picture quality.
During adjusting, the function name MOIRE and the set figures (1~62) are displayed on the screen.

(3) VIDEO COLOR adjustment (COLOR)
The color gain of the picture for VIDEO 1 and VIDEO 2 can be adjusted by pressing the UP DOWN buttons [12] [13].
During adjusting, the function name COLOR and the set figures (–31~0~30) are displayed on the screen.

(4) VIDEO SHARPNESS adjustment (SHARPNESS)
The sharpness of the picture for VIDEO 1 and VIDEO 2 can be adjusted by pressing the UP DOWN buttons [12] [13].
During adjusting, the function name SHARPNESS and the set figures (–31~0~30) are displayed on the screen.

(5) VIDEO TINT adjustment (TINT)
The color tint of the picture for VIDEO 1 and VIDEO 2 can be adjusted by pressing the UP DOWN buttons [12] [13].
During adjusting, the function name TINT and the set figures (–31~0~30) are displayed on the screen.

(6) PICTURE WIDTH adjustment (H-WIDTH)
The width of the picture for each input can be adjusted by pressing the UP DOWN buttons [12] [13].
During adjusting, the function name H-WIDTH and the set figures (1~62) are displayed on the screen.

(7) PICTURE HORIZONTAL POSITION adjustment (H-PHASE)
The horizontal position of the picture for each input can be adjusted by pressing the UP DOWN buttons [12] [13].
During adjusting, the function name H-PHASE and the set figures (1~62) are displayed on the screen.

(8) PICTURE HEIGHT adjustment (V-HEIGHT)
The height of the picture for each input can be adjusted by pressing the UP DOWN buttons [12] [13].
During adjusting, the function name V-HEIGHT and the set figures (1~62) are displayed on the screen.

(9) PICTURE VERTICAL POSITION adjustment (V-POSITION)
The vertical position of the picture for each input can be adjusted by pressing the UP DOWN buttons [12] [13].
During adjusting, the function name V-POSITION and the set figures (1~62) are displayed on the screen.

(10) PICTURE PINCUSHION DISTORTION adjustment (PCC-GAIN)
The side pincushion distortion of the picture for each input can be adjusted by pressing the UP DOWN buttons [12] [13].
During adjusting, the function name PCC-GAIN and the set figures (-31~30) are displayed on the screen.

(11) PICTURE TRAPEZOID DISTORTION adjustment (PCC-PHASE)
The trapezoid distortion of the picture for each input can be adjusted by pressing the UP DOWN buttons [12] [13].
During adjusting, the function name PCC-PHASE and the set figures (-31~30) are displayed on the screen.

(12) STATUS DISPLAY INHIBIT button (DISPLAY)
On power up, and when selecting the input, the status is shown automatically for a few seconds.
This function can be inhibited by UP DOWN buttons [12] [13]. (UP: ON, DOWN: OFF).
When ON, the status is shown, and when off, status is not shown.
When selecting ON/OFF, selection is shown on the screen.

(13) ADDRESS NO. setting (ADDRESS)
When more than one monitor is used at the same location, using the wireless remote control may cause confusion in operating monitors. To avoid the above confusion, each monitor can be given an address number or I.D number for individual operation.
The address number can be set by pressing the UP DOWN buttons [12] [13], the figures displayed can be increased or decreased from 01 to 99 by the buttons (UP, DOWN) [12] [13].
After setting, when using the wireless remote control, the address no. must be selected by the ten-keys [14] and ENTER button [14] to call the monitor, then normal operation by the wireless remote control is available.
The address number can be cancelled by setting to number 00.

In case of 05 for address no.
Press 05 button
Press ENTER button —— Figure 5 flashes on a screen.

Normal operation

(14) PICTURE WHITE COLOR setting (WHITE)
The white color of the picture of RGB or VIDEO can be selected by pressing the UP DOWN buttons [12] [13] as follows.

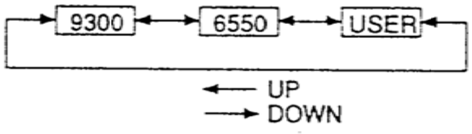

(15) RED GAIN OF WHITE COLOR adjustment (DRIVE. R)
When the user mode of white color setting is selected, the red gain of the white color can be adjusted by pressing the UP DOWN buttons [12] [13].
During adjusting, the function name R-GAIN and the set figures (-31~30) are displayed on the screen.

(16) GREEN GAIN OF WHITE COLOR adjustment (DRIVE. G)
When the user mode of white color setting is selected, the green gain of the white color can be adjusted by pressing the UP DOWN buttons [12] [13].
During adjusting, the function name G-GAIN and the set figures (-31~30) are displayed on the screen.

(17) BLUE GAIN OF WHITE COLOR adjustment (DRIVE. B)
When the user mode of white color setting is selected, the blue gain of the white color can be adjusted by pressing the UP DOWN buttons [12] [13].
During adjusting, the function name B-GAIN and the set figures (-31~30) are displayed on the screen.

4.1.6 DISPLAY STATUS

[9] DISPLAY STATUS CALL button (CAL/CLR)
The input name, and address no. which have been selected are displayed on the screen by pressing the CALL or CAL/CLR button [9].
Pressing again clears the display.

Display status examples;

VIDEO 1 .... VIDEO 1 selected
RGB 1 .... RGB 1 selected
05 RGB 2 .... Address no. 05, RGB 2 selected

[10] MUTE
Sound can be muted by pressing the MUTE button [10], and pressed again to cancel. Also,mute can be automatically cancelled by pressing the VOL. button [6].

4.1.7 MANUAL DEGAUSS

[11] MANUAL DEGAUSS button (DEGAUSS)
The monitor is equipped with an auto-degauss function which operates at power on. However, if manual degaussing is required, press the DEGAUSS button [11].

4.2 Adjustment for Preset Mode and Picture Size of Video Input

This monitor has a Factory Preset mode and a User mode for picture size on RGB1 and RGB2. The mode name PRESET MODE or USER MODE is displayed on the screen.

The Preset mode has been adjusted to be compatible with the timings of personal computers and work stations (Table 1) by the factory. The VIDEO various input also has been adjusted for normal size. Thus, adjustment of the picture size is not required.

However, a user can adjust the picture size temporarily as desired by the same manner described in paragraph 4.1.5 page 11.

NOTE: In case of the timings shown on Table 1 and VIDEO, the memory of the above picture size adjusted would be erased at the power off.

In case of Preset mode, if a re-adjustment of the picture size which has been set by the factory is needed. The user can re-adjust the picture size by the same manner as described in paragraph 4.1.5 page 11, then pressing both VOLUME and DEGAUSS buttons at a same time, at this time MEMORIZED is displayed on the screen. The confirmed operation is effective only on the front control switches.
In case of User mode, a re-adjusting picture size is memorized without the above operation.

NOTE: The memory of the picture size adjusted by the factory is erased after the above re-adjustment by a user.

This monitor has 10 memory buffers (Preset mode memory buffer) for factory presets and 5 memory buffers(User mode memory buffer) for user setting. When the sync timing differs from Table 1, at least 3kHz horizontal scan frequency, or 10Hz vertical scan frequency, or the sync signal polarities, the monitor stores the sync timing in one of 5 memory buffers for user setting. When 5 memory buffers for user setting are all written, the next input sync timing writes over the first memory buffer.

Table 1. Memory Buffer Factory Presets

Memory Buffer	Preset Timing	Fh (kHz)	Fv (Hz)	Polarity	
				H	V
1	640 x 480	31.47	60.0	NEG	NEG
2	640 x 400	31.47	70.0	NEG	POS
3	640 x 480	35.00	66.7	NEG	NEG
4	800 x 600	48.08	72.2	POS	POS
5	1024 x 768	56.47	70.0	NEG	NEG
6	1024 x 768	61.09	75.8	POS	POS
7	1152 x 870	68.68	75.1	POS	POS
8	1152 x 900	71.71	76.0	NEG	POS
9	1280 x 1024	78.13	72.0	POS	POS
10	1280 x 1024	81.97	76.2	POS	POS

Note) in case of Sync-on-Green, polarities are NEG (H) and NEG (V).
in case of composite sync (NEG), polarities are NEG (H) and POS (V).
in case of composite sync (POS), polarities are POS (H) and POS (V).

4.3 Connector Panel (Rear)

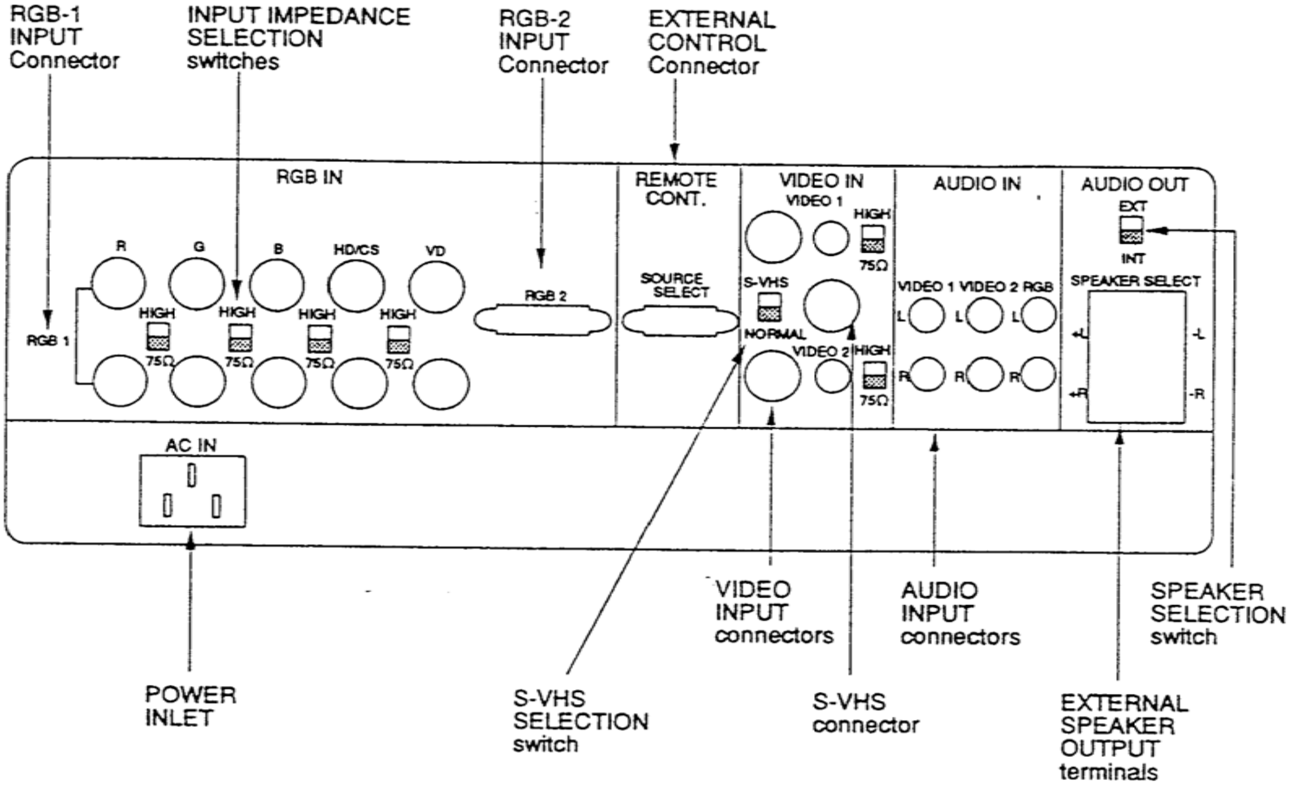

4.3.1 POWER INLET SECTION

(1) POWER VOLTAGE SELECTION

The monitor's auto-sensing power supply can automatically detect 120V AC or 220-240V AC, 50 or 60Hz.

4.3.2 VIDEO INPUT

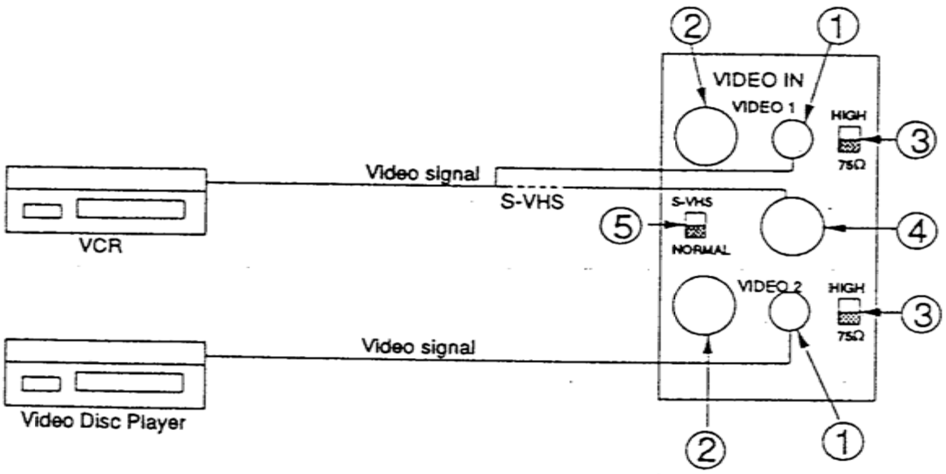

(1) ① ② VIDEO INPUT connector
VIDEO 1 and VIDEO 2 can be connected to VCR, Video disc player, etc.
VIDEO 1 and VIDEO 2 are provided with RCA-type pin-jack and BNC connector which are connected internally in parallel.

(2) ③INPUT IMPEDANCE SELECTION switch (HIGH/75Ω)
Input impedance can be selected by the switch.
When the monitor is to be used at stand-alone condition, the switch position should be at 75Ω.
In case of connection in loop through strings, switch position as shown.

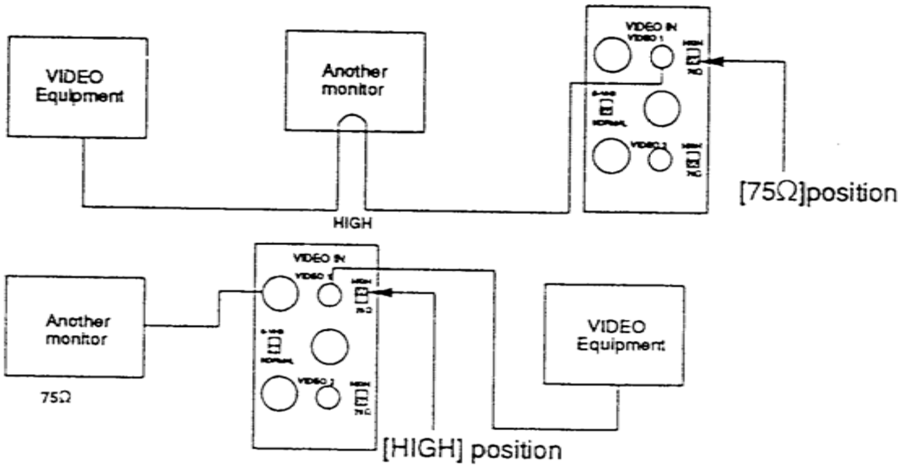

(3) ④ ⑤ Input connector and switch for S-VHS format signal
VIDEO 1 is also provided with an S-VHS connector for the connection with a VCR which can output S-VHS format.
When the S-VHS connector is used, set the switch to S-VHS position.

Pin No.	Signal	
1	GND-(Y)	
2	GND-(C)	
3	Y-signal	1.0 Vp-p 75Ω, Sync.-Negative
4	C-signal	Burst level 0.266 Vp-p, 75Ω

4.3.3 RGB INPUT

RGB input is for a analog video signal generated from personal computer, RGB type video equipment, etc.

Analog input consists of RGB 1 and RGB 2.

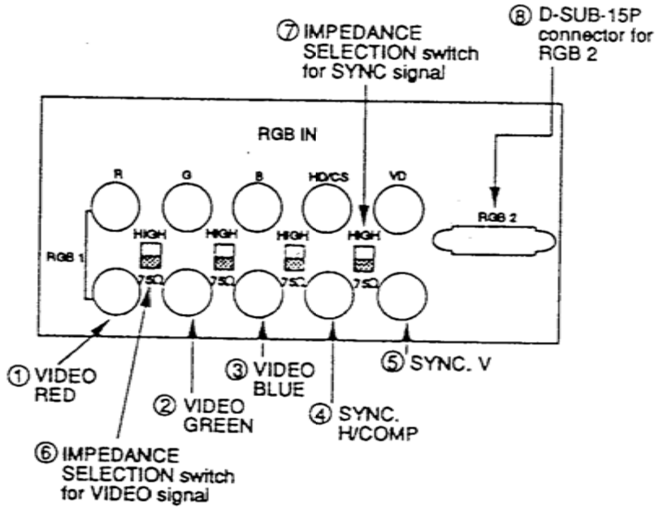

(1) ①~⑧RGB 1 input connector
RGB 1 is for multipurpose use.
The video signals (Red, Green, Blue) are connected to the connectors ①~③.
The connection of SYNC signal is determined by the method of SYNC of a personal computer or video controller as follows.

SYNC Signal		Connection and Switch position	
Method	Signal level	Connector ④, ⑤	Impedance Selection S.W. ⑦
Composite SYNC (COMP)	0.3V	only HD/CS ④	75Ω
	TTL	only HD/CS ④	HIGH
Separate SYNC	0.3V	Horizontal HD/CS ④ Vertical-VD ⑤	75Ω
	TTL	Horizontal-HD/CS ④ Vertical-VD ⑤	HIGH
SYNC on Green	0.3V	Unnecessary	Unnecessary

(2)⑧RGB 2 input connector

RGB 2 is for a personal computer use.
Two (2) types of SYNC signals can be fed into RGB 2. In case of 0.3V - SYNC level, use pins 4 and 5. In case of TTL level use pins 12 and 13.

RGB 2

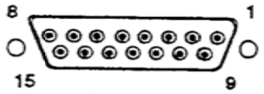

D-sub 15P

Pin No.	Signal	Pin No.	Signal
1	Red 0.7 Vp-p 75Ω	9	GND-(Red)
2	Green 0.7 Vp-p 75Ω	10	GND-(Green)
3	Blue 0.7 Vp-p 75Ω	11	GND-(Blue)
4	H/COMP-SYNC 0.3 Vp-p 75Ω	12	H/COMP-SYNC TTL
5	V-SYNC 0.3 Vp-p 75Ω	13	V-SYNC TTL
6	"RESERVE" N.C.	14	"RESERVE" N.C.
7	"RESERVE" N.C.	15	"RESERVE" N.C.
8	"RESERVE" N.C.		

4.3.4 AUDIO INPUT, OUTPUT

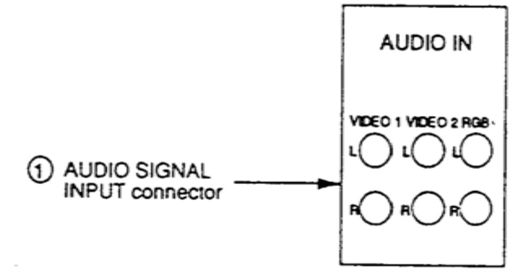

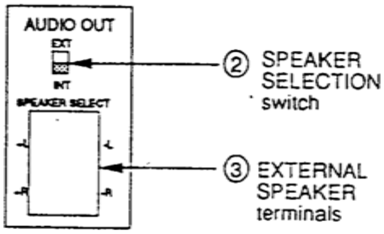

(1) ① AUDIO SIGNAL INPUT connectors
Each audio signal of VIDEO 1, VIDEO 2, RGB 1 and RGB 2 can be input to the connectors ①, and the audio signals are changed over to synchronize with the screen by the input selection.
When the Audio signal is monaural, R-side signal is also distributed to L-side if the signal is provided to R-side.
But if the signal is provided to L-side, the signal is not distributed to R-side.

(2) ① ② EXTERNAL SPEAKERS connection
When external speakers are provided to reproduce the desired dynamic sounds, the speaker signals can be output from the internal amplifier.
In this case, set the speaker selection switch to EXT position.

4.3.5 EXTERNAL CONTROL CONNECTOR (EXT SOURCE SELECT)

The monitor can be controlled by external signals (TTL) without a operation on wireless remote control and/or front control switches.
The following functions can be controlled.
- Power ON/OFF
- Input selection
- Manual degauss

EXT SOURCE SELECT

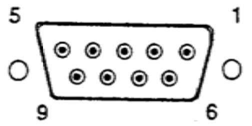

D-sub 9P

Pin No.	Signal	
1	Video-1 Select	TTL Low
2	Video-2 Select	TTL Low
3	RGB-1 Select	TTL Low
4	RGB-2 Select	TTL Low
5	Degauss	TTL Low
6		
7	Control Method Remote-Cont. External-Cont.	TTL High- Remote-Cont. Mode Low- External-Cont. Mode
8	Power on/off	TTL Low-Power on
9	GND	

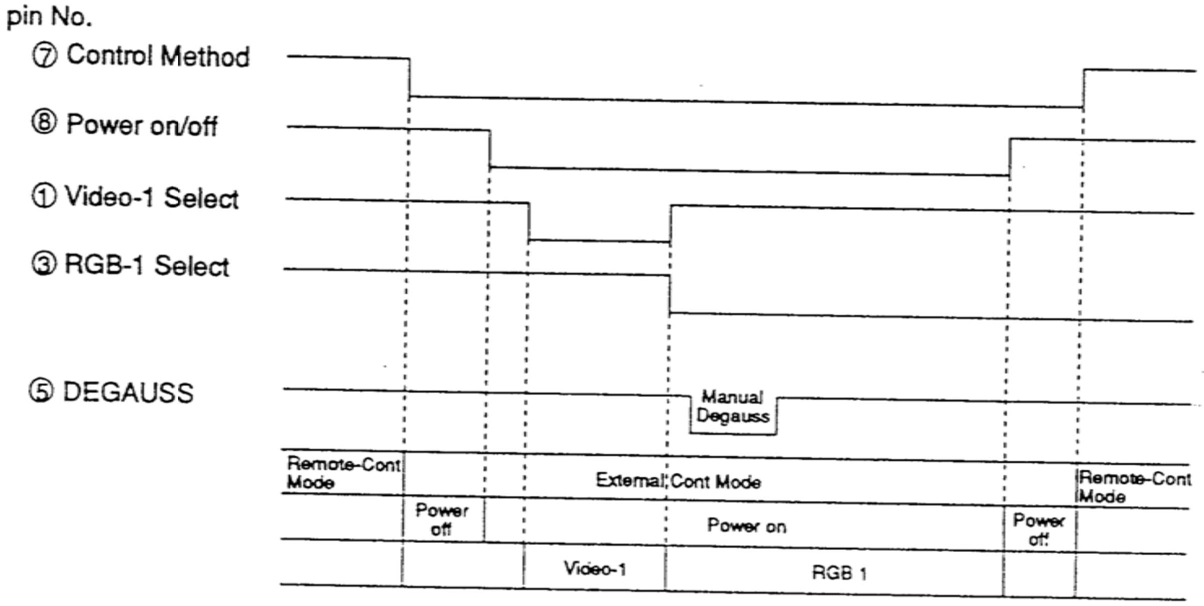

5.1 Input

This monitor is capable of being connected with all types of inputs as shown in the following table. Before connecting with a personal computer, video equipment, etc., make sure of the types of video and sync signals.

Input	Video Signal	Synchronizing Signal	Connected Unit
VIDEO 1 VIDEO 2	Composite Video Synchronizing Signal NTSC, M-NTSC, PAL, SECAM		VCR Video Disc Video Tuner
RGB 1 RGB 2	0~0.7 Vp-p Analog Video Signal (R, G, B)	H, V-Sync, Separate (TTL)	IBM PS/2 (VGA) Apple Macintosh
		H, V-Sync, Composite (TTL)	
		H, V-Sync, Composite (0.3V)	RGB type Camera
		Sync on Green (0.3V)	Apple Macintosh

5.2 Connection Example for Various Input

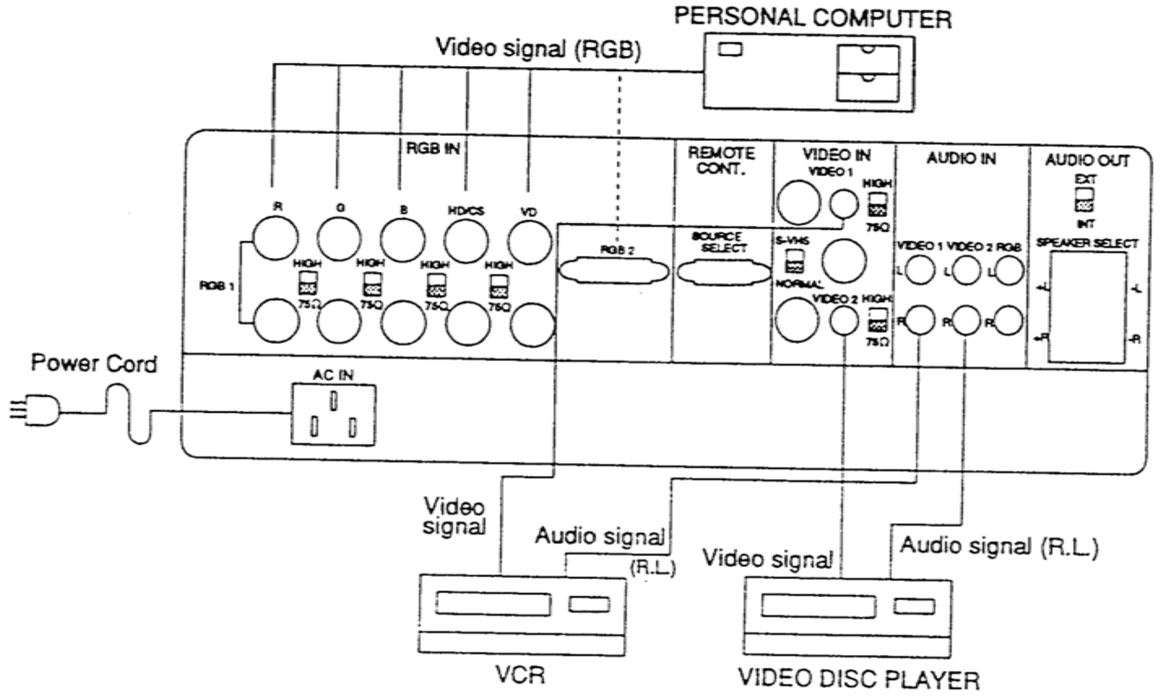

If the internal speaker can not output enough loudness, external speakers can be driven by the internal amplifier.

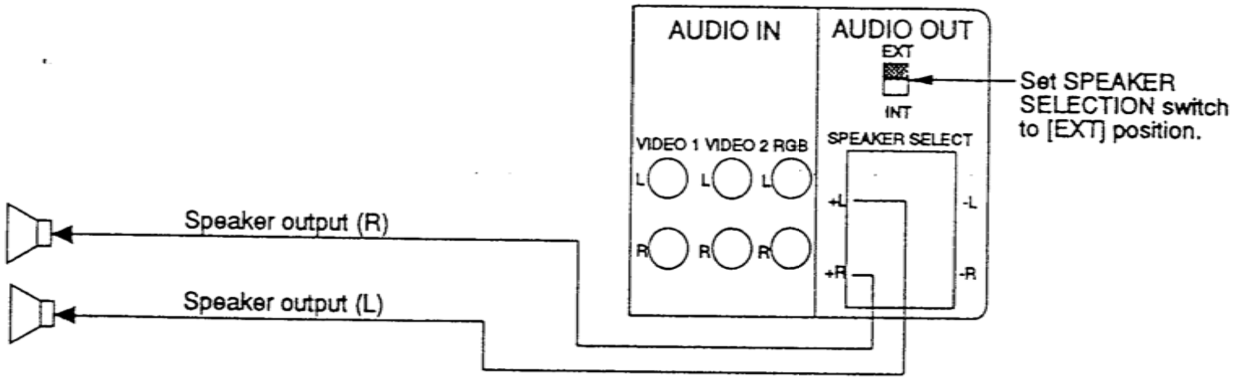

CAUTION;

- The external speakers to be connected should have an impedance of over 6Ω, and capable of taking over 3W output power.
- Before making the connection, set the volume level to minimum and switch off the power supply.
- Make sure to connect with the correct polarity.
- If the speakers are placed near the monitor, magnetism from the speakers may affect the display colors. Either you use magnetically sealed speakers, or place them at a distance from the monitor.

5.6 Connection for External Control (EXT SOURCE SELECT)

The monitor can be controlled by external signals without a operation on wireless remote control and/or a front panel.

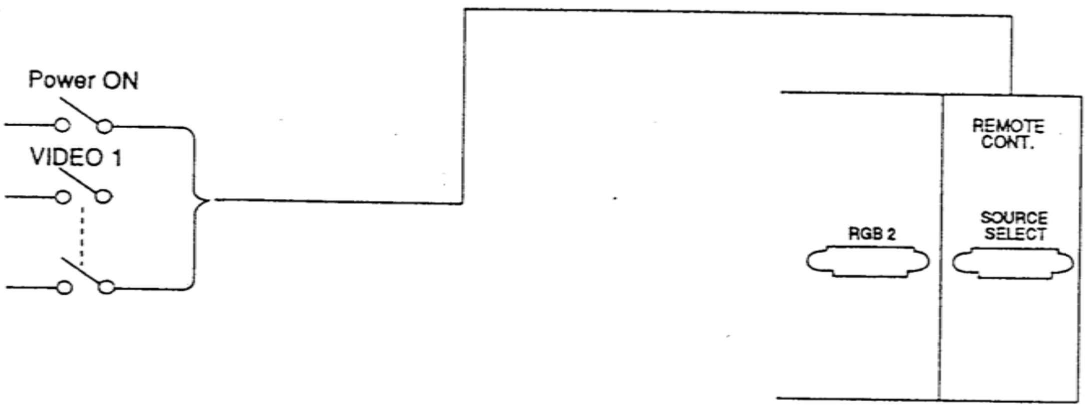

The signal level should be TTL or contact signal.

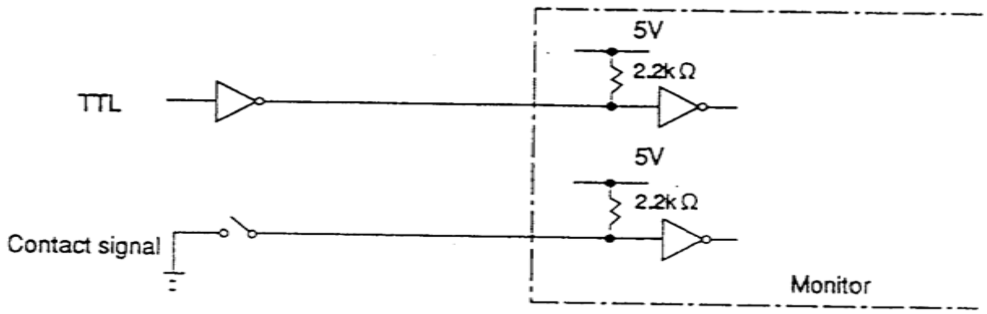

6.1 Location Hints

- The monitor should be placed away from the device or a facility which generates magnetism, e.g. transformer, motor, large current power line and steel pillar, because the magnetism causes partial coloration phenomena.
- Never cover the slots or openings with cloth or other fabric.
- Never place the monitor in a built-in enclosure, unless proper ventilation is provided.
- Never place the monitor near or over a radiator or heat register.
- Never expose the monitor to rain or excessive moisture and dust as this can be a potential cause of fire or shock hazard.
- Never place the monitor on an unstable monitor cart or stand: the monitor may fall causing damage to the monitor or personal injury. Use only with a cart or stand recommended by the manufacturer.
- Install the set about 4" (0.1meters) away from the wall.
- Never place the monitor under direct sun or ultraviolet lamp, because of face plate coloration change.

6.2 Picture Purity Adjustment

As this monitor uses a large-type cathode ray tube, display colors will be affected when the monitor is subjected to magnetism (partial coloration phenomena).
In order to achieve the best color condition, carry out adjustment in accordance with paragraph 4.1.5 page 10.

NOTE; Adjustment against the terrestrial magnetism depends on the location of the monitor and the direction of the screen, thus, when the monitor is relocated, re-adjustment will be necessary.

8.1 Rating and Specification

Model		XC-3730C
CRT	Size	89 cm / 37-INCH (35" viewable)
	Deflection angle	110 degree
	Strip trio pitch	0.85 mm (center), 1.05 mm (corner)
	Phosphor	B22 Medium-short persistence
	Face glass	Dark tinted
Input Signal	Video signal	NTSC, M-NTSC, PAL, SECAM standard signal S-VHS standard signal RGB analog signal
	Sync. signal	For RGB analog input · HD, VD separate sync. HD/VD composite sync. Sync. on green
Scanning Frequency	Horizontal	15~85 kHz (Automatic tracking)
	Vertical	40~120 Hz (Automatic tracking)
Display Size	Horizontal	715 mm (Video)~660 mm (RGB)
	Vertical	540 mm (Video)~495 mm (RGB)
Power Source		120V AC or 220~240V AC 50/60 Hz
Power Consumption		380W
Cabinet Dimensions		(W) 865 x (H) 740 x (D) 576 mm
Weight		98 kg (217 lbs)
Ambient Conditions		Temperature 0~40°C, Humidity 45~80% RH